REVISION RECORD			
LTR	ECO NO:	APPROVED:	DATE:

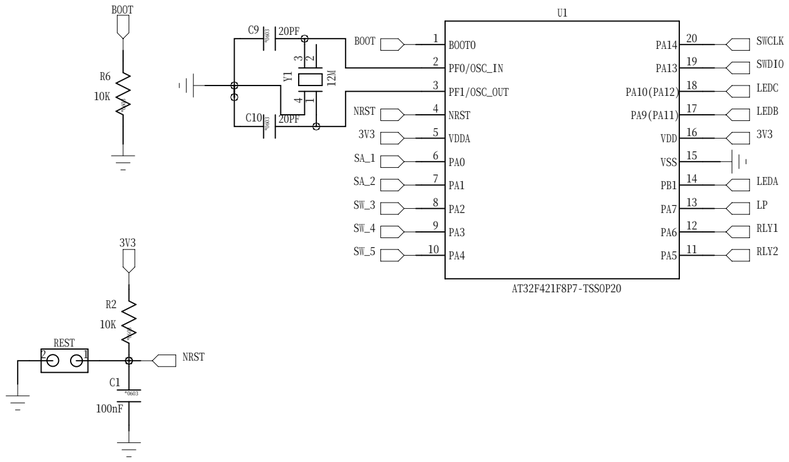

芯片及周边电路

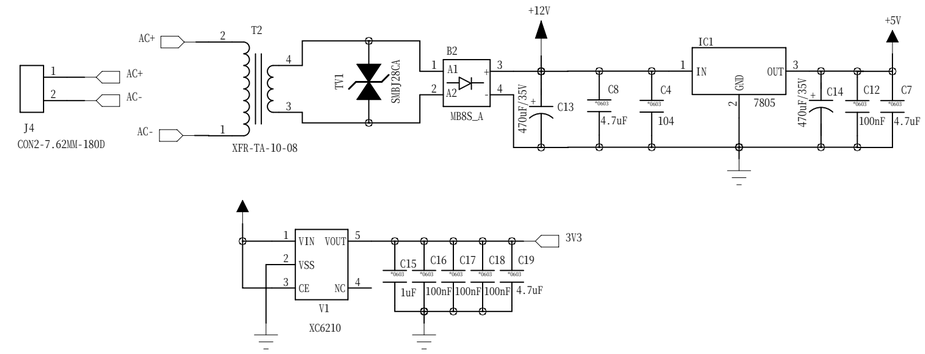

电源模块

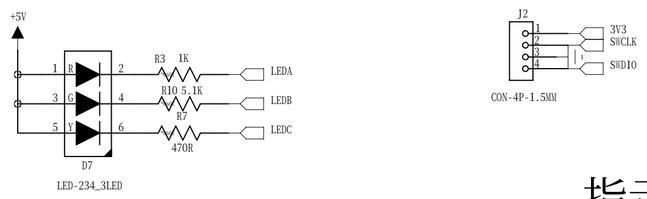

指示灯及下载电路

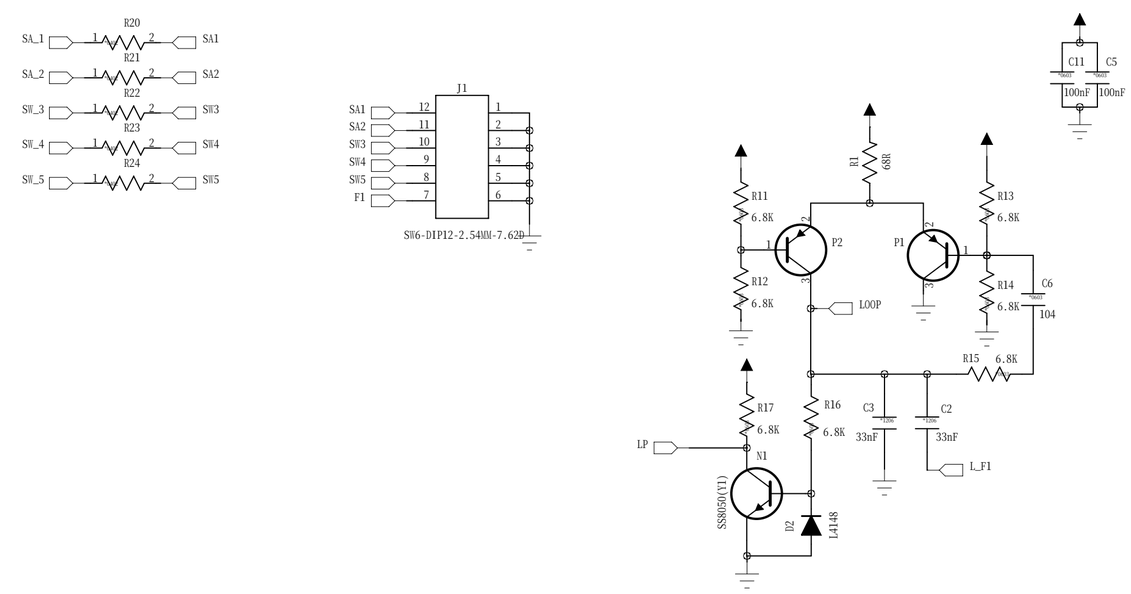

继电器及其输出

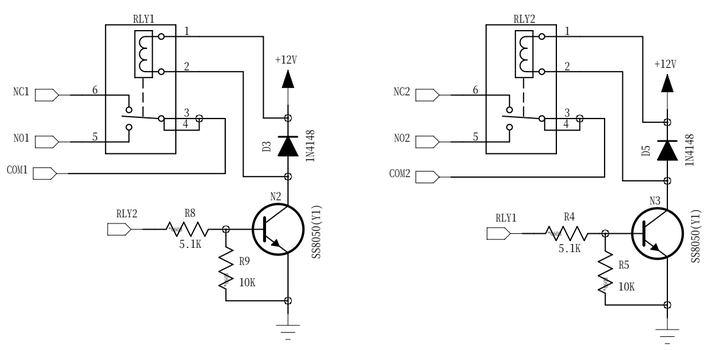

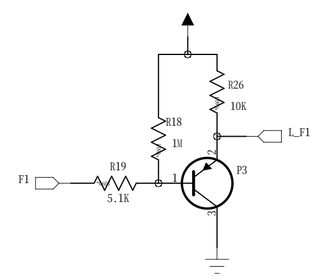

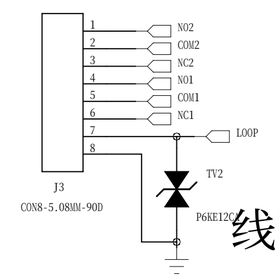

线圈及拨码开关

COMPANY: SZ DG				
TITLE: DLD-154 Ver3.00				
DRAWN: TangL	DATED: 2025.09.03	CODE: <Code>	SIZE: C	DRAWING NO: / REV:
CHECKED:	DATED:			
QUALITY CONTROL:	DATED:			
RELEASED:	DATED:	SCALE: <Scale>		SHEET: 1 OF 1