REVISION RECORD			
LTR	ECO NO:	APPROVED:	DATE:

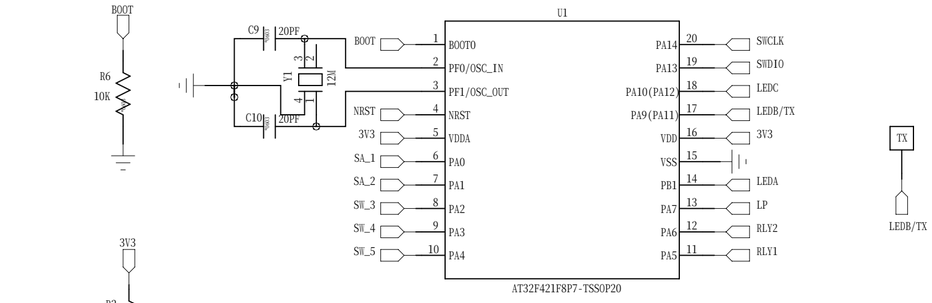

芯片及周边电路

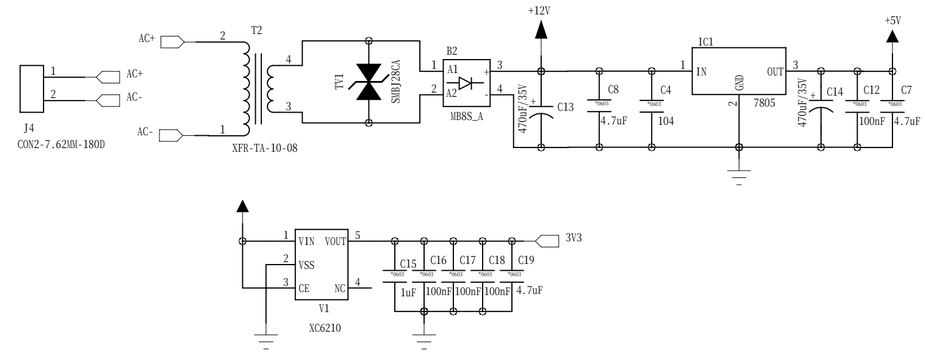

电源模块

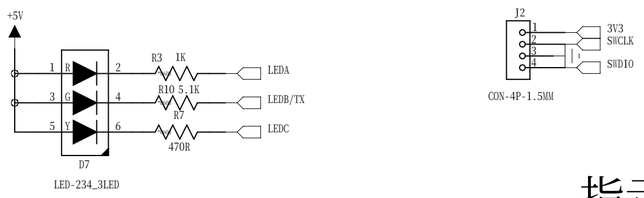

指示灯及下载电路

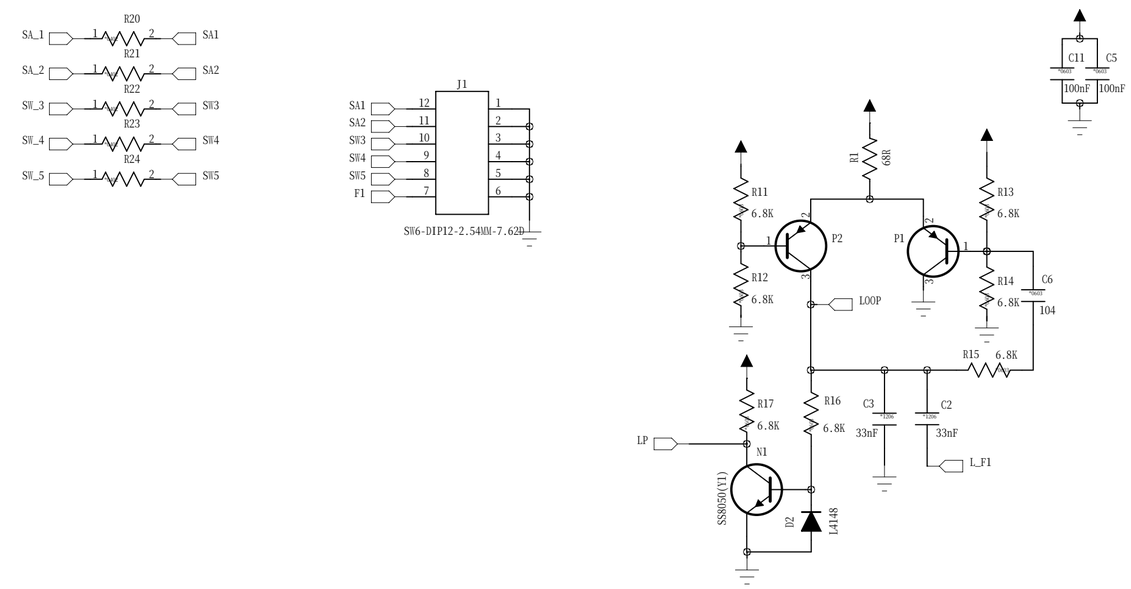

继电器及其输出

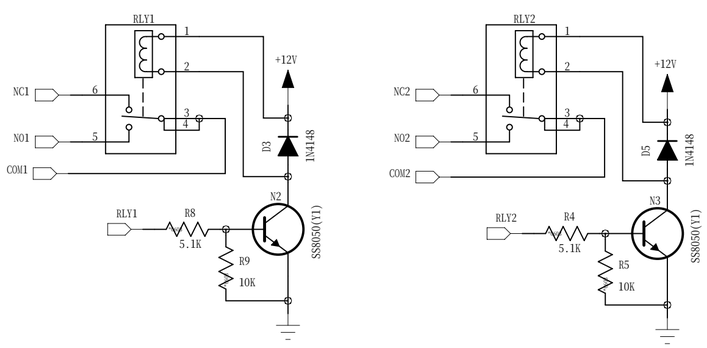

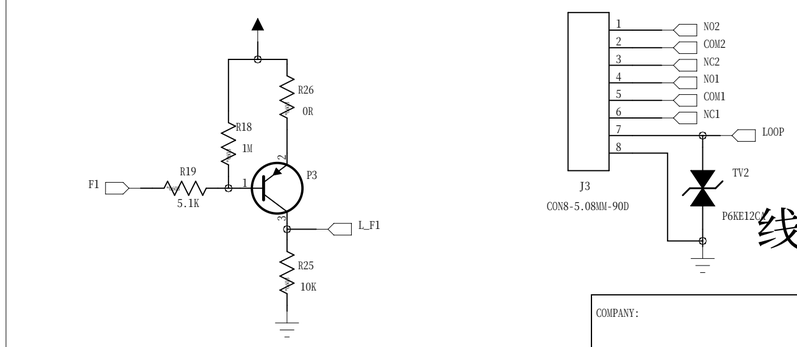

线圈及拨码开关

COMPANY: SZ DG			
TITLE: DLD-154 Ver3.01			
DRAWN: TangL	DATED: 2025.10.21		
CHECKED:	DATED:		
QUALITY CONTROL:	DATED:		
RELEASED:	DATED:		
CODE: <Code>	SIZE: C	DRAWING NO: 继电器命名已修正	REV:
SCALE: <Scale>		SHEET: 1 OF 1	